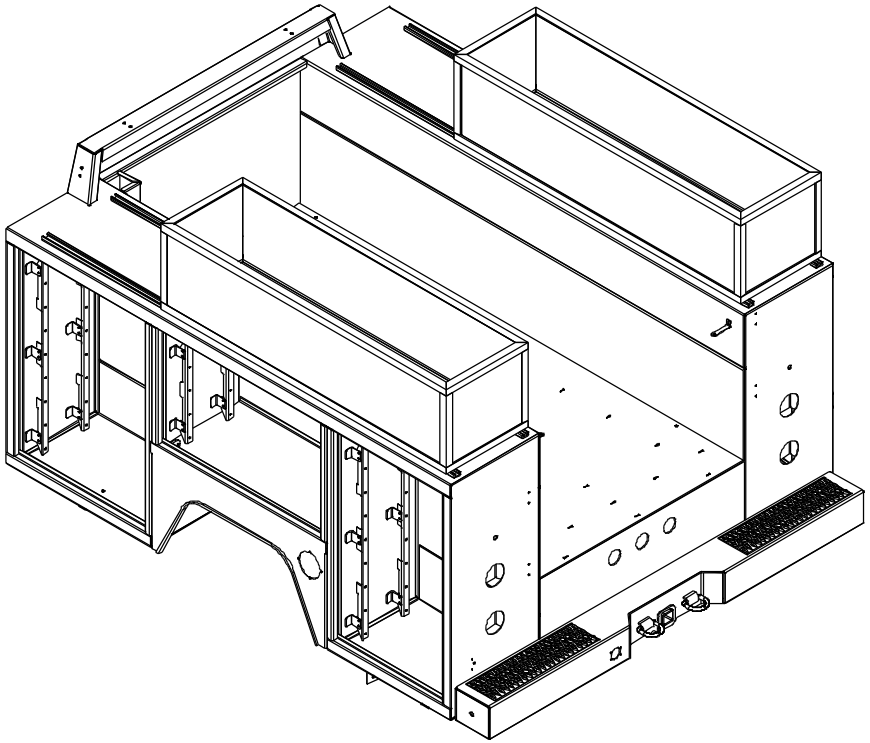

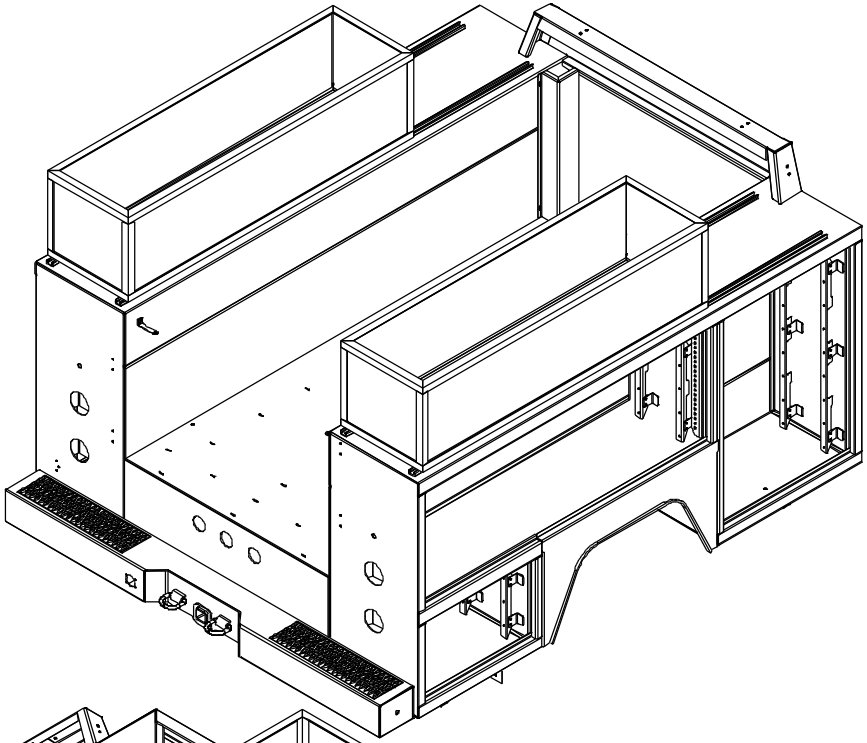

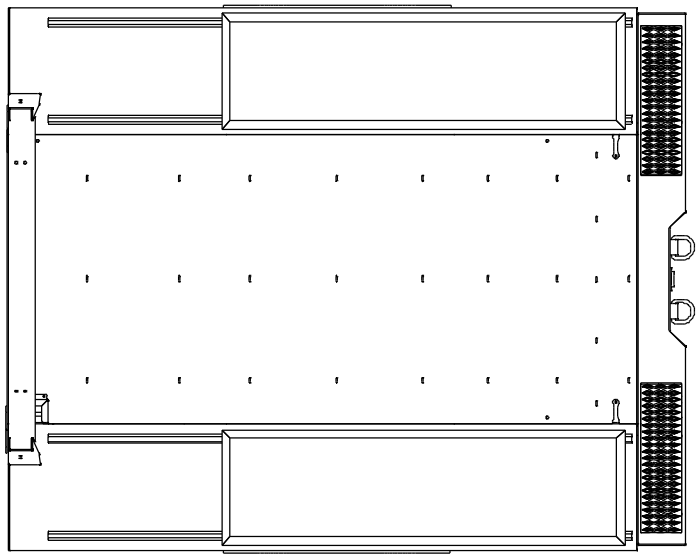

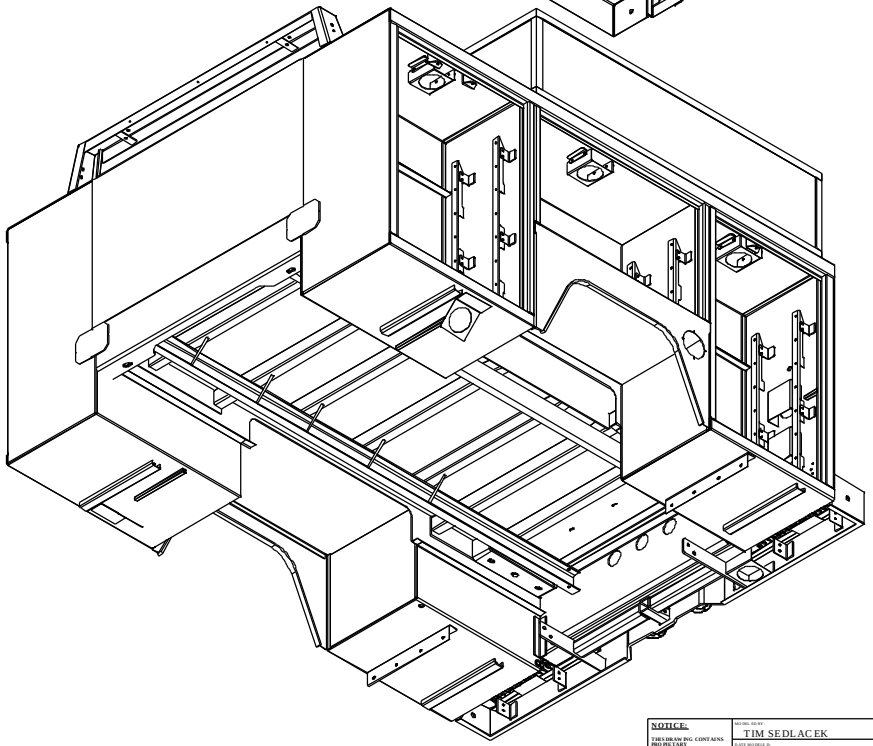

NOTICE:

THIS DRAWING CONTAINS PROPRIETARY INFORMATION

IT IS SUBMITTED IN CONFIDENCE AND IS TO BE USED SOLELY FOR THE PURPOSE FOR WHICH IT IS SUBMITTED AND ALL RIGHTS ARE RESERVED UPON RAISQUE THE DRAWING AND SUCH INFORMATION IS NOT TO BE PROPERLY DUCED, COPIED, OR DISCLOSED, OR USED OTHERWISE IN WHOLE OR IN PART WITHOUT WRITTEN AUTHORIZATION.

DRAWN BY:	TIM SEDLACEK
DATE REVISED:	11/6/2008
CHECKED BY:	TIM SEDLACEK
DATE CHECKED:	11/6/2008
PROJECT MGR:	TIM SEDLACEK
ENGINEER:	JAMES SCEARCE

TOLERANCES UNLESS NOTED.

DECIMAL - .00
ANGLE - 1°
MACH. SURF. - - - - - - - - - - - - - - - - - - - 125

GENERAL NOTES:

1. ALL BENDS 90°TO BOR OTHERWISE SPECIFIED
2. **DO NOT** SCALE THIS PRINT
3. ALL DIMENSIONS ARE IN INCHES
4. REMOVE ALL BURRS AND SHARP EDGES

SUMMIT TRUCK BODIES

990 VERNON RD.
WATHENA, KS. 66090
PHONE: (785) 989-3100
FAX: (785) 989-3565

BODY, SERV, N, 50, 4, 50, 50, 4, 50, 109, 7

SHEET	WEIGHT	SIZE	PART NUMBER	REV
2	2055.38 lbmass	C	900-00377	--